TH 5,5.15

PRELIMINARY

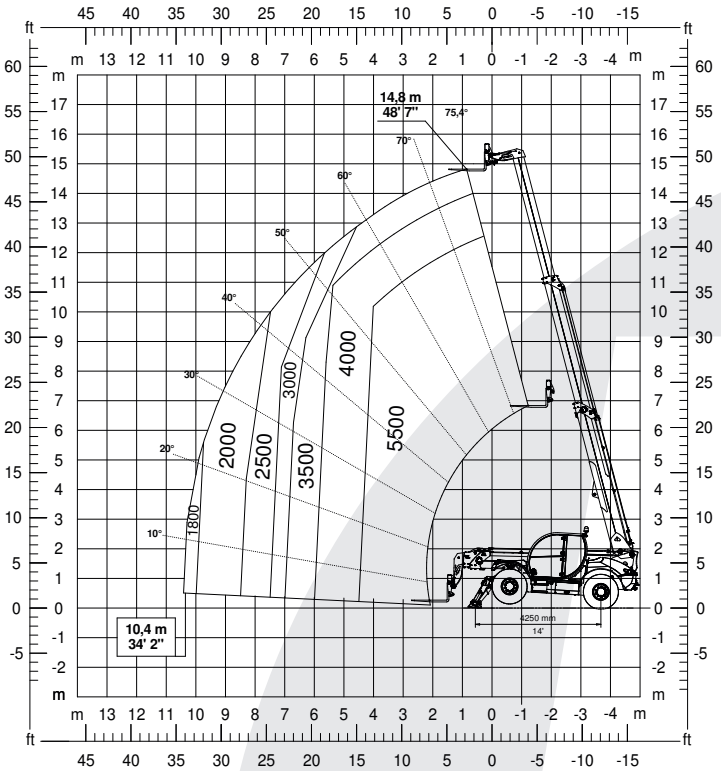

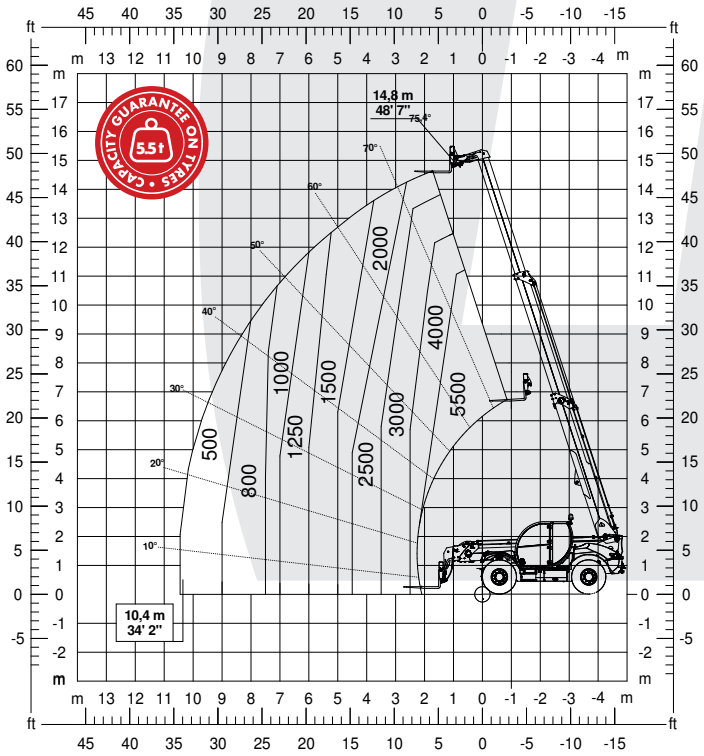

LOAD CHART WITH FORKS

MAGNI
TELESCOPIC HANDLERS

TH 5,5.15

PRELIMINARY

MACHINE MODEL	Telescopic handler	TH 5,5.15		
	Maximum lifting capacity	5,500 kg (center of gravity 600 mm)		
	Maximum lifting height	14.80 m		
ENGINE	Type	**Deutz TCD 3,6 L4 Stage V**	**Deutz TCD 3,6 L4 Stage IV - Tier 4f**	**Deutz TCD 3,6 L4 EDG Stage IIIA**
	Rated power	74,4 kW (97,7 hp) @ 2,200 rpm		
	Maximum torque	410 Nm @ 1,600 rpm		
	Displacement	3,6 l		
	Cylinders	4 in line		
	Engine configuration	Diesel direct injection turbocharged		
	Cooling system	Water – intercooler		
TRANSMISSION	Type	Hydrostatic		
	Model	Bosch Rexroth		
	Maximum pressure	470 bar		
	Displacements	Electronically controlled variable displacement pump Variable displacement motor		
	Gear box	Dropbox, 2 speeds forward-reverse		
AXLES AND BRAKES	Type	Axles with planetary gearboxes		
	Rear axle	Oscillating and steering with hydraulic locking		
	Front axle	Oscillating and steering with levelling +/-5°		
	Service brake	Hydraulically operated wet multi-disk brakes on each axle		
	Parking brake	Hydraulic with negative action		
	Tyres dimensions	445/65 R22,5		
PERFORMANCE	Max. travel speed	35 km/h		
	Drawbar pull	76 kN		
	Gradeability	58%		
	Turning radius (end of forks)	5,610 mm		
WEIGHTS	Total unladen	13,200 kg		
	Front axle unladen (boom retracted and lowered)	5,500 kg		
	Rear axle unladen (boom retracted and lowered)	7,700 kg		
TANK AND SYSTEM CAPACITIES	Fuel tank	145 l		
	AdBlue	10 l*		
	Hydraulic oil tank	90 l		
	Engine oil tank	9 l		
	Cooling liquid	20 l		
HYDRAULIC CIRCUIT FOR MOVEMENTS	Max. operating system pressure	350 bar		
	Circuit type	Load sensing		
	Service pump	Bondioli & Pavesi – Variable displacement		
	Controls for boom	Danfoss – SIL 2 electro-proportional valve		
	Controls for stabilizers	Bosch Rexroth – Electro-hydraulic actuators		
	Movements control	1 joystick Danfoss with FNR switch and dead man safety device - Management with CAN bus technology		
STANDARDS MET	EN 1459-1: concerning standards for variable-reach trucks EN 13000: concerning standards for hydraulic cranes EN 280: concerning standards for mobile elevating work platforms FOPS/ROPS	EU 2016/1628: EU regulation concerning engine emissions ANSI A92.20 ANSI B56.6		
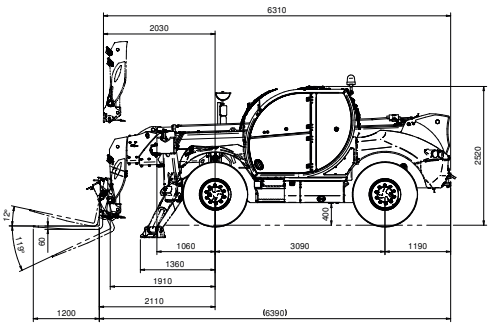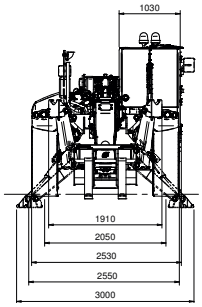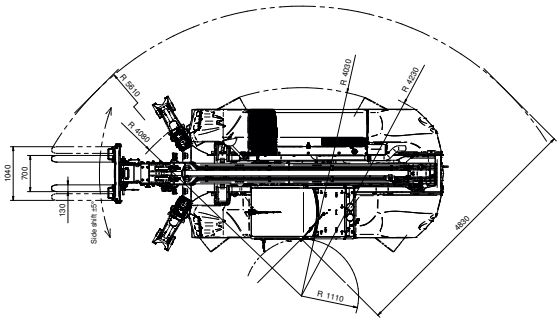
**Only available for Stage V and Stage IV engines*